NO	DR	CH	REVISION	APPD	DATE
R#	R-DR	R-CH	ISSUE-DESCRIPTION		R-DATE

NO	DR	CH	REVISION	APPD	DATE
R#	R-DR	R-CH	ISSUE-DESCRIPTION		R-DATE

BILL OF MATERIAL

MARK	QTY	SIZE	DESCRIPTION	LENGTH	TAG NUMBER
1	1	30"	PIPE, STD, ASTM A53 GRADE B, ERW	2'-5 7/8"	
2	1	30"	PIPE, STD, ASTM A53 GRADE B, ERW	6'-1 1/8"	
3	1	30"	ELL, 90° LR STD, ASTM A-234 GR WPB		

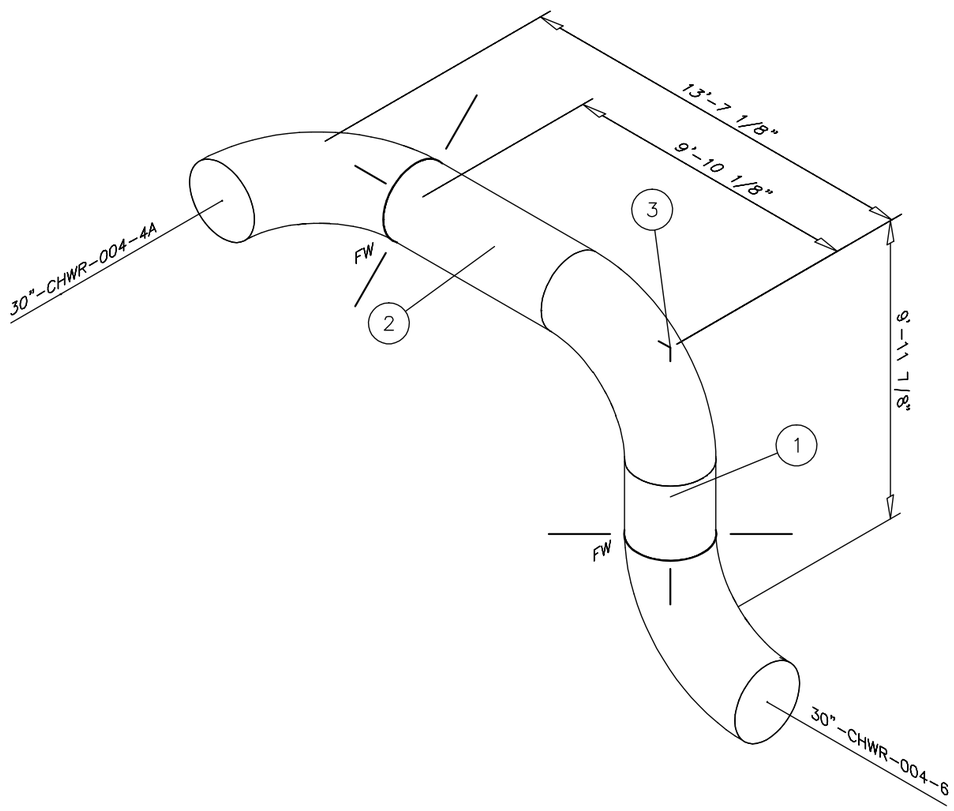

VERIFY ALL DIMENSIONS PRIOR TO FABRICATION

SAMPLE SPOOL

1. PIPING SPECIFICATION SPEC
2. CODE B31.3 X1 B31.1 X2 SECT.1 X3
3. INSULATION THK I-THK SPEC I-SPEC
4. TRACING TYPE T-TYPE SIZE T-SIZE
5. PAINT SPECIFICATION PAINT
6. LINE COMODITY COMODITY
7. DES. TEMP. DEG.F DES. PRESS PRESS PSIG

8. NDE VISUAL YES X4 VISUAL %
9. X-RAY YES X5 X-RAY %
10. STRESS RELIEVE YES X6
11. PREHEAT TEMP.1 DEG. F. MIN.
12. INTERPASS TEMP.2 DEG. F. MAX.
13. TYPE TEST TYPE TEST PRESS PRESS PSIG
14. OTHER X9

WELD PROC.
PROC.-NO.1
PROC.-NO.2
PROC.-NO.3
PROC.-NO.4
PROC.-NO.5
PROC.-NO.6

MDS Mechanical Drafting Services Inc.
Drafting & Design for Todays Construction
100 S. Adkins Way, Suite 105
Meridian, Idaho 83642
Voice: (208) 888-1631
Fax: (208) 888-7465

DR NAME	DATE	JOB NAME JOB-NAME.
CH NAME	DATE	
REF.DWG.	NUMBER	JOB NO JOB-NO.
LINE NO.	NUMBER	
DRAWING NO. X"-XXXXX-X-XXX-X"	DIA. INCH / LIN. INCH	SHT/NO # OF #'S REV